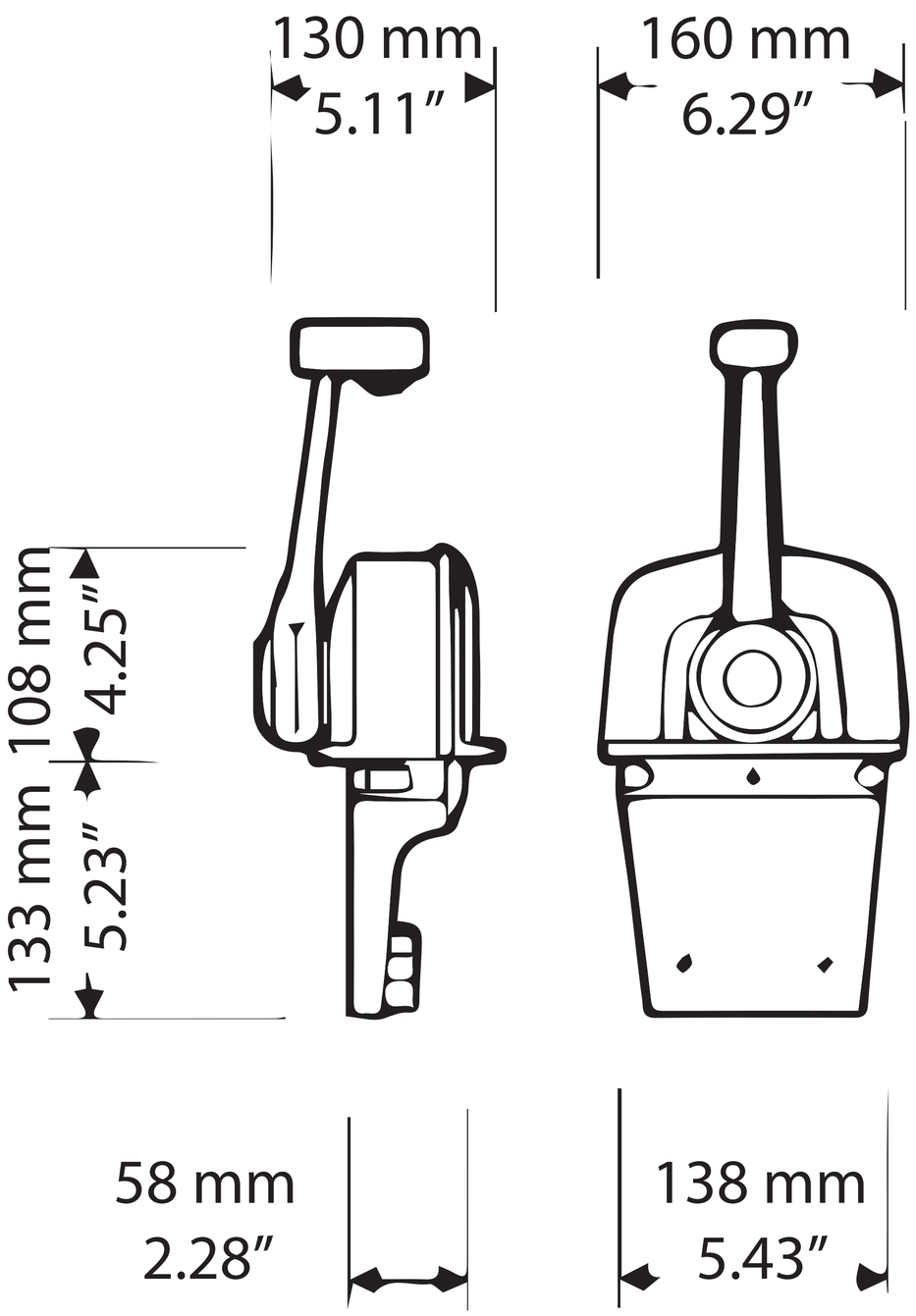
130 mm
5.11″
160 mm
6.29″
108 mm
4.25″
133 mm
5.23″
58 mm
2.28″
138 mm
5.43″