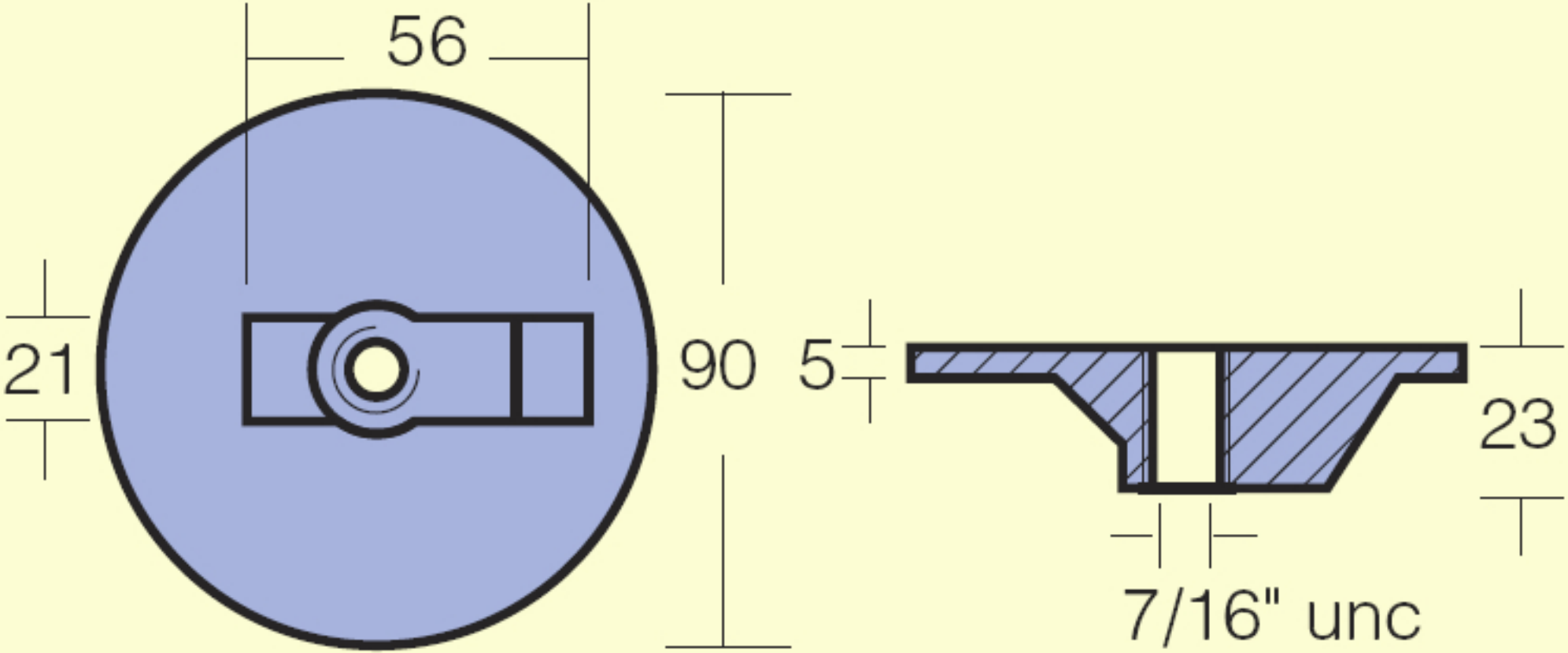
56
21
90
5
23
7/16" unc