Referense 444070 | A3

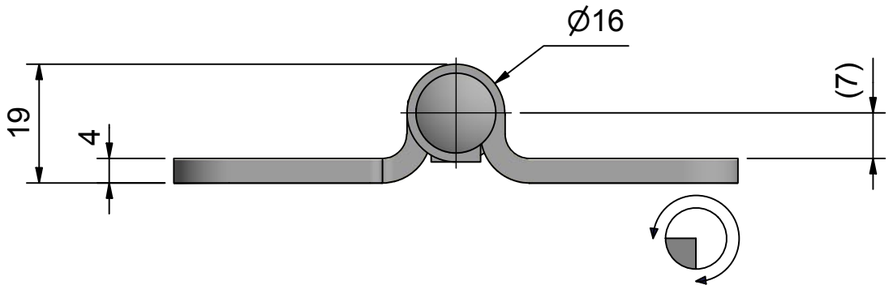

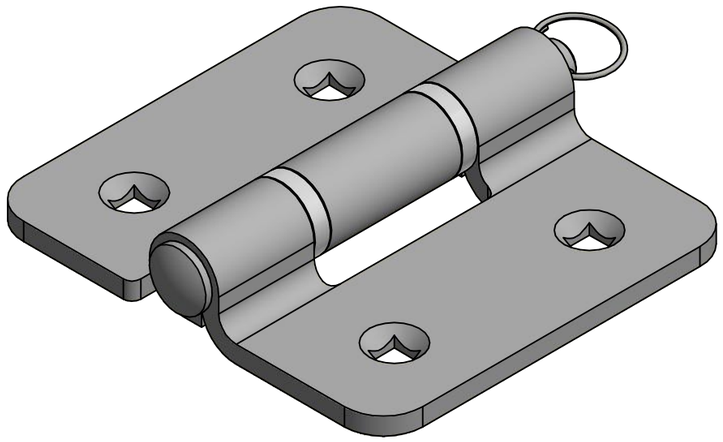

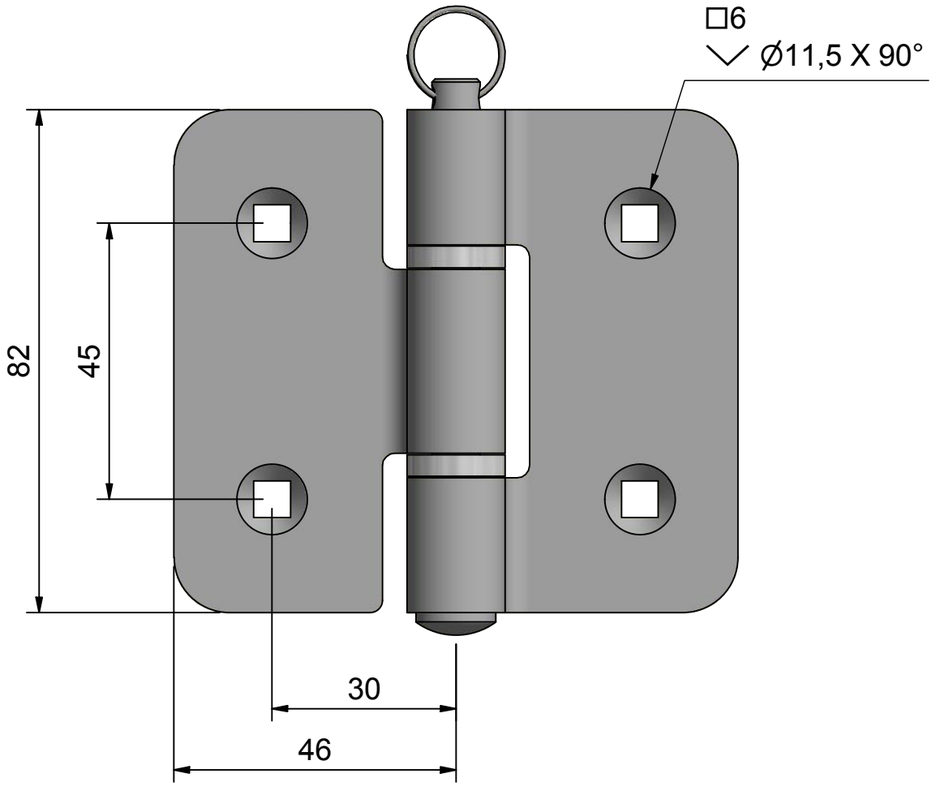

AISI304/Electro polished	Date 190927/HH
Description **Hinge 82x92**	Item no. **444070**