Referense 429800 | A3

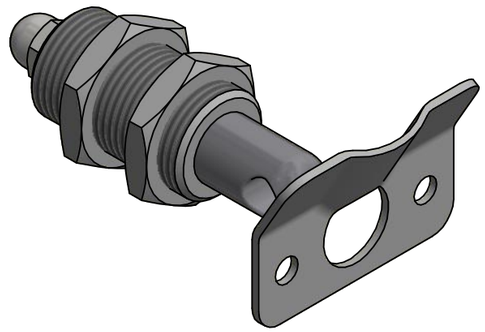

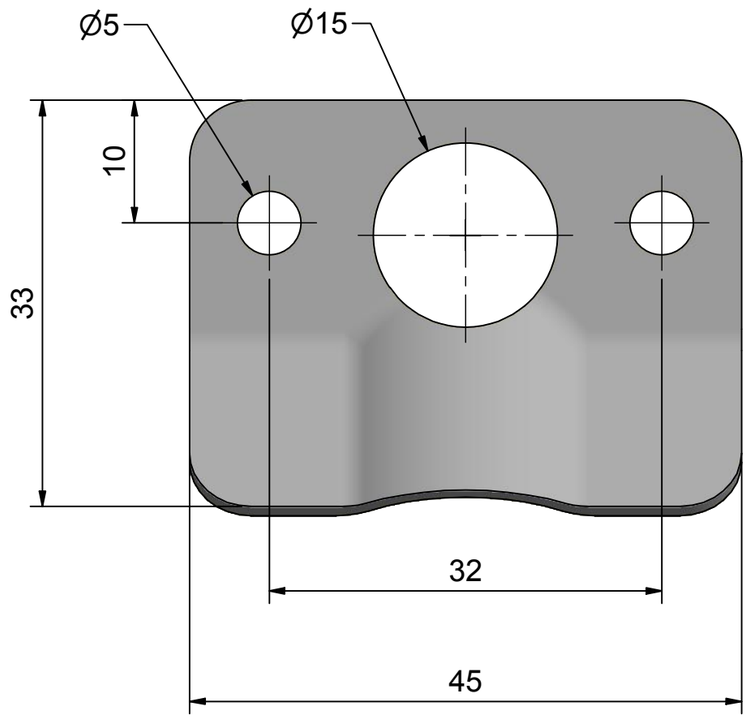

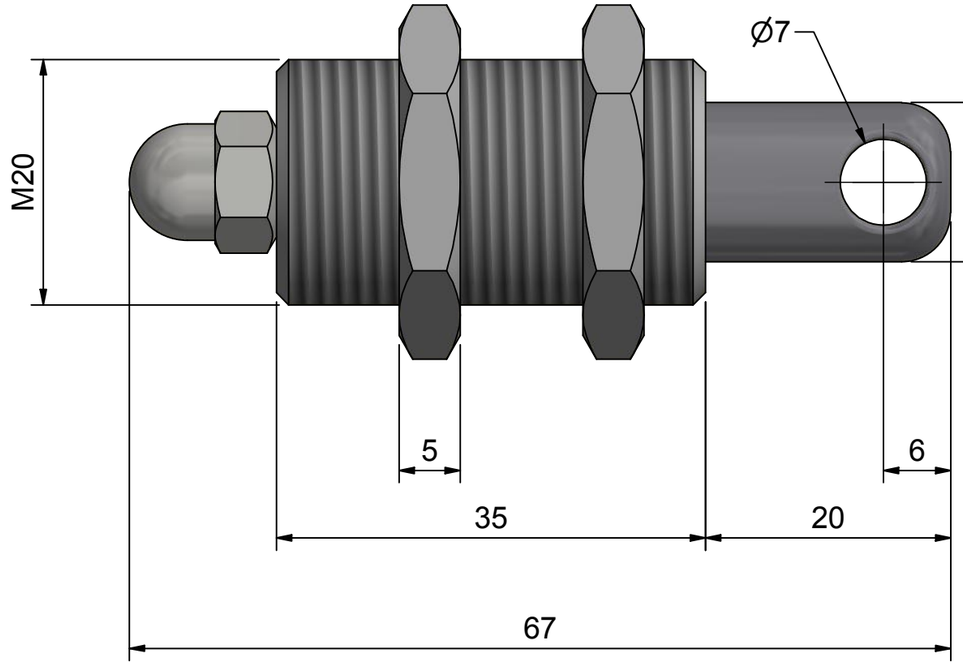

Attachment

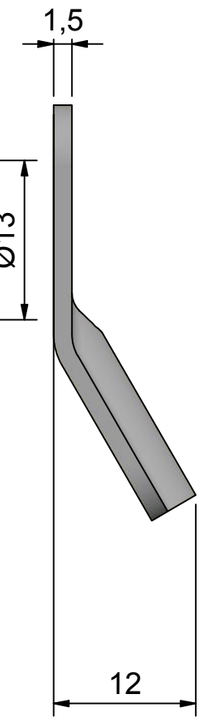

AISI316/Brass	Date 190917/HH
Description **Hatch Lock**	Item no. **429800**