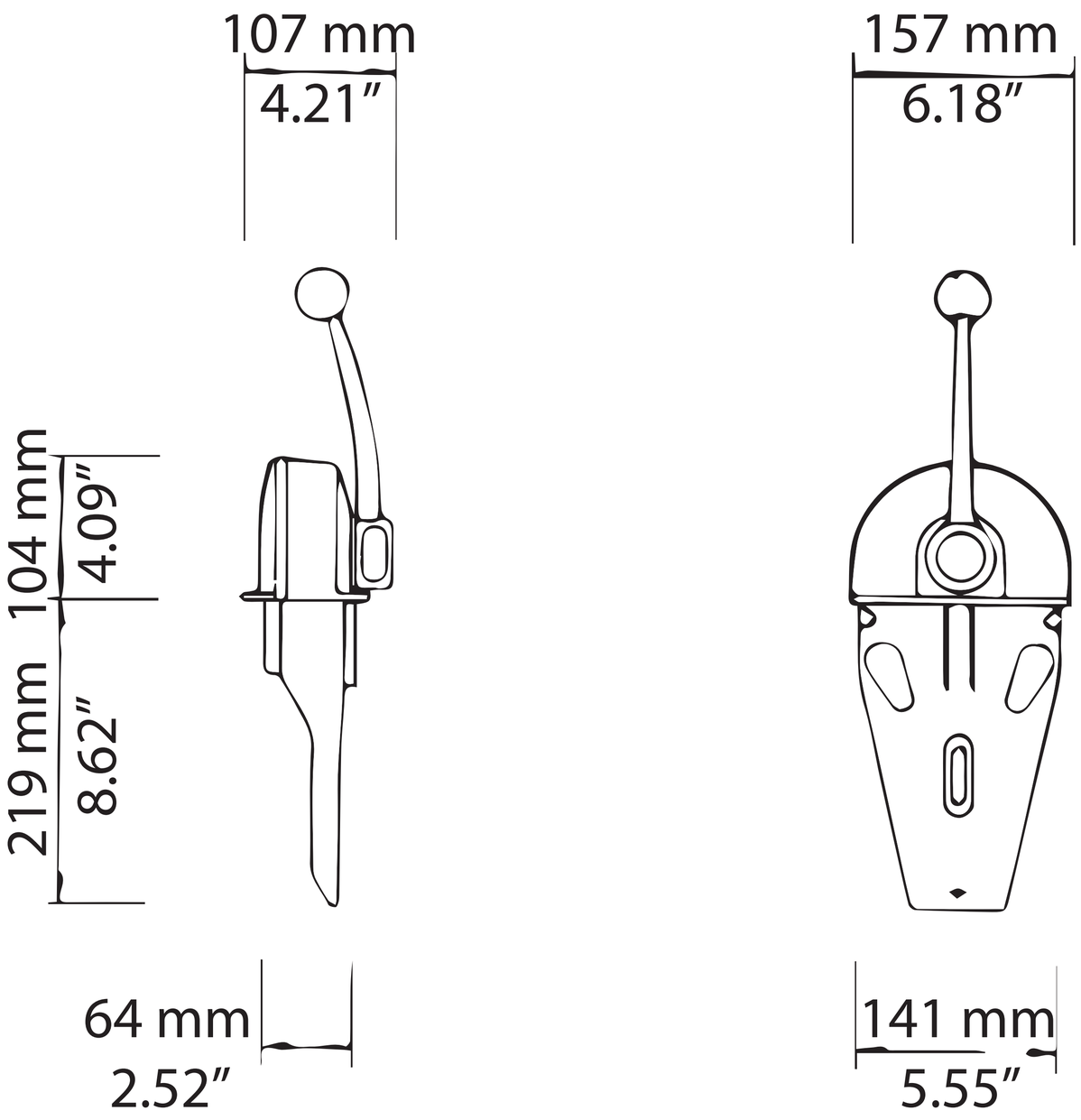
107 mm
4.21″
157 mm
6.18″
104 mm
4.09″
219 mm
8.62″
64 mm
2.52″
141 mm
5.55″