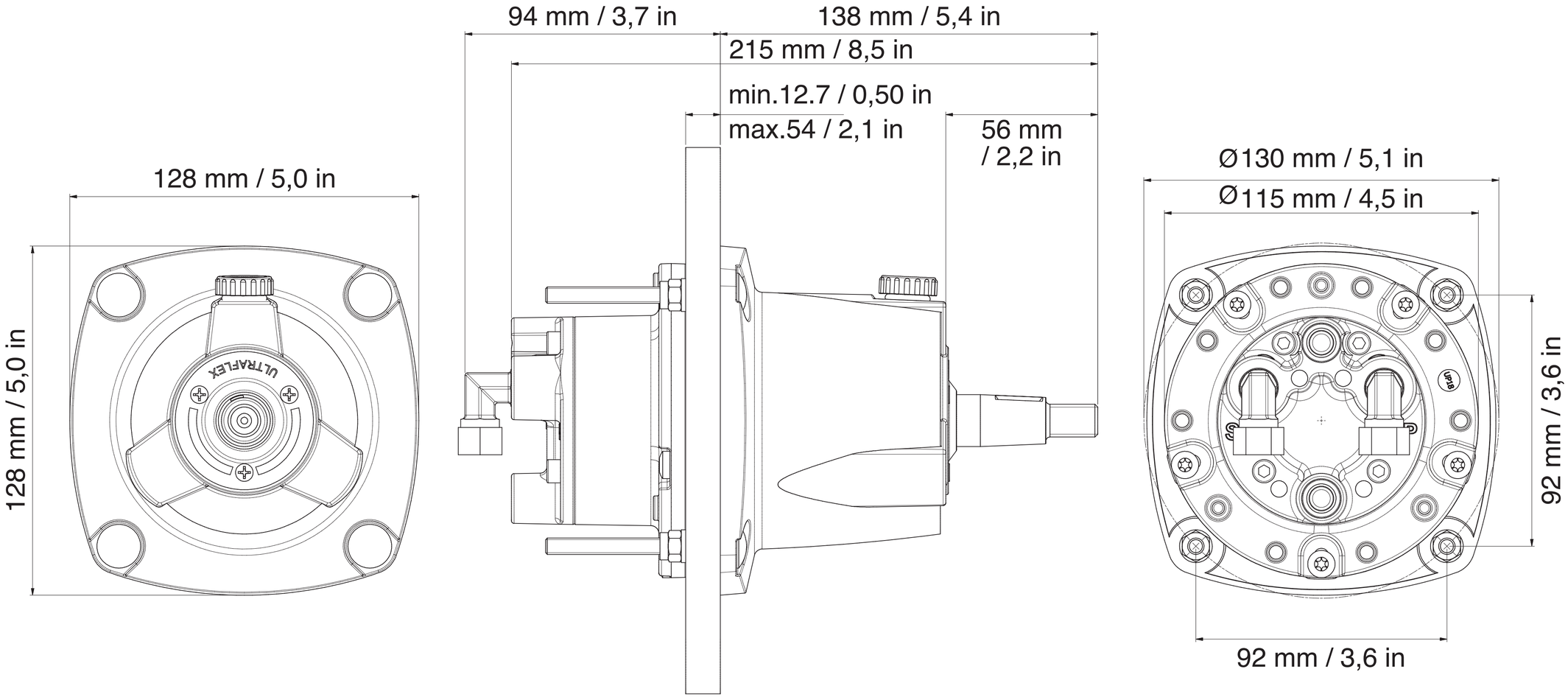
94 mm / 3,7 in
138 mm / 5,4 in
215 mm / 8,5 in
min.12.7 / 0,50 in
max.54 / 2,1 in
56 mm
/ 2,2 in
128 mm / 5,0 in
128 mm / 5,0 in
ULTRAFLEX
Ø130 mm / 5,1 in
Ø115 mm / 4,5 in
92 mm / 3,6 in
92 mm / 3,6 in