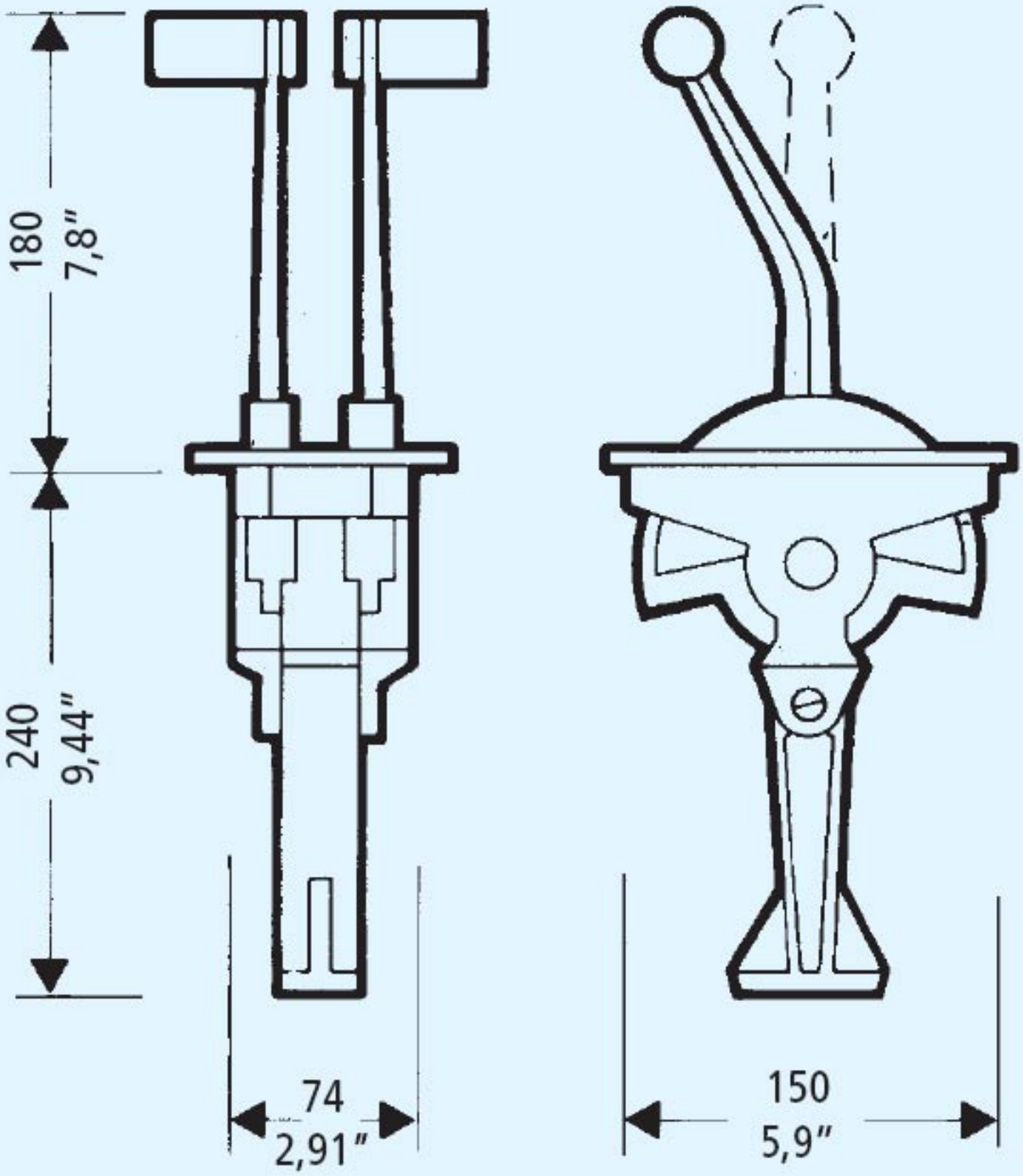
180
7,8"
240
9,44"
74
2,91"
150
5,9"